Multichannel Meter

DATA SHEET

Hardware Specifications

Technical Particulars	Offered Specification
Meter Type	Single and Three Phase
Electrical Parameters	Voltage: Phase wise- LL, LN Current: Channel Wise Currents,-Total 9 Currents Line Frequency: Hz Current Rating: 20A, 40A, 60A, 100A Solid core or split core CT's Active Power: Total kW & phase wise Energy: Total kWh Power Factor: Lag/lead
Control Parameters	Aux Supply: 85-270 V AC Voltage Range: 60V to 415V (Line to Line) Current: CT primary programmable
Indicators	LCD and LED for power on and communication indication
Operating Temperature	-10-75°C
Storage Temperature	-10-75°C
Operating Frequency	45Hz to 55Hz
Relative Humidity	Upto 95% non-condensing
Weight	750gm (approx.)
Dimensions	185 x 110 x 30 (WXHXD) BCPM with Enclosure
Mounting	Din Rail Mount
Communication Port	Isolated RS485: 3 wire with Modbus protocol
Baud Rate	Default with 9600
Parity	Even and Odd

Ordering Information

Item Code	INV-METER-0147

Copyright@2026InvendisTechnologies

CONNECTION DIAGRAM

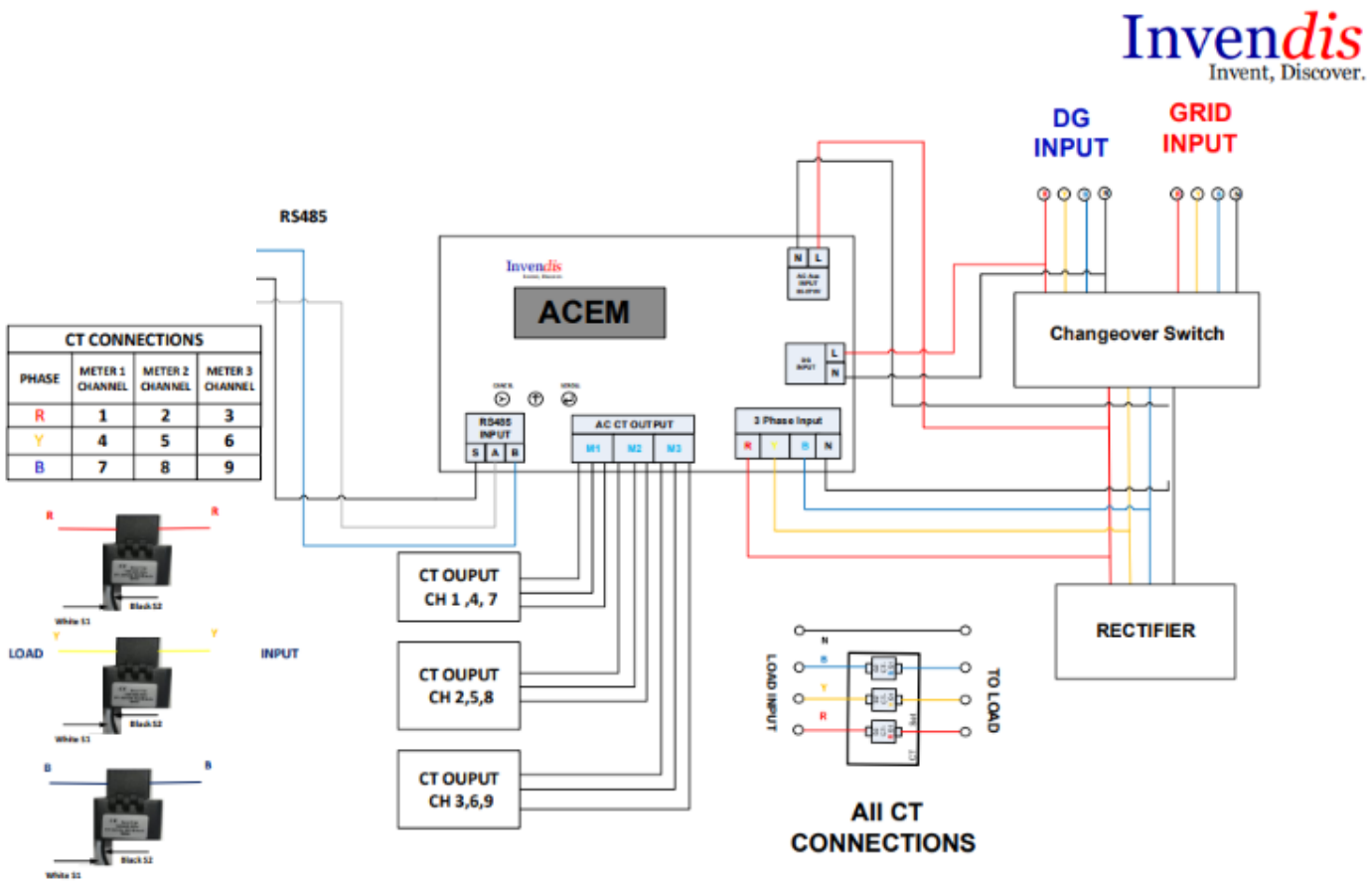

All rights reserved, subject to change without prior notice

Get in touch:

sales@invendis.com

www.invendis.com

Invendis Technologies India Private Limited
No. 230, 1st Cross, 38th Main, BOOHBCS Layout, BTM
2nd Stage, Bangalore – 560 068